R50 Shortwave AM PLL Receiver Kit

Assemble Manual V11.0

Overview

This kit is specially for receiving ordinary short-wave broadcast and HAM communication signals, combined with the actual use of the domestic situation, after many optimizations to form the current version.

The hardware described in this article is V11.0 and the main PCB labelled “HM00ABRC_11”.

Specifications

Supply Voltage : 12V (It is recommended to use linear regulated power supply or battery)
Current: 110mA
Tuning Range : 3-23MHz
Mode : AM SSB CW
Step：100Hz/1KHz/10KHz/100KHz
Speaker: 8 ohm 250mW

Circuit Description

Refer to the attached figure at the end of this document. The signals received by the antenna are first sent to two filtering networks according to the frequency band, ensuring that signals within the range of 3-23 MHz can enter TA7358 for high amplification. Meanwhile, inside TA7358, there is a mixer that mixes the received signal with the PLL local oscillator signal.

The intermediate frequency of this device is 10.7 MHz. The AM signal after being mixed by TA7358 is sent to the 10.7 MHz crystal filter. Its function is to filter out the irrelevant signals generated during the mixing process. Then it is sent to TA2003 for further intermediate frequency

amplification and demodulation, and finally sent to TDA7231. The SSB CW signal takes another RF channel. After passing through the narrowband crystal filter, it enters TA7640 for intermediate frequency signal amplification, and then enters TA2003 and the BFO signal for mixing.The resulting audio signal is passed to FM62429 which controls the audio volume. The output voice signal is then amplified by TDA7231 and sent to the speaker/headphones.

Component Selection

All capacitors less than 1000pF are high-frequency ceramics, capacitors greater than 1uF are aluminum electrolytic capacitors, and all resistors are 1/4W 5% fixed resistors.

Soldering Reminder

1 First weld the two 5-PIN connection pins on the OLED back board,

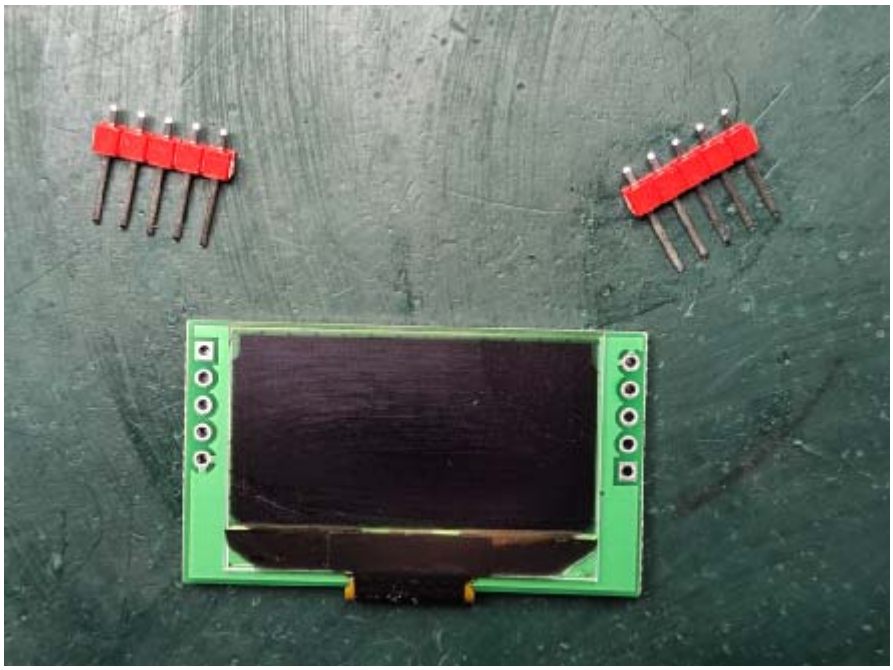

2 Welding the keyboard board

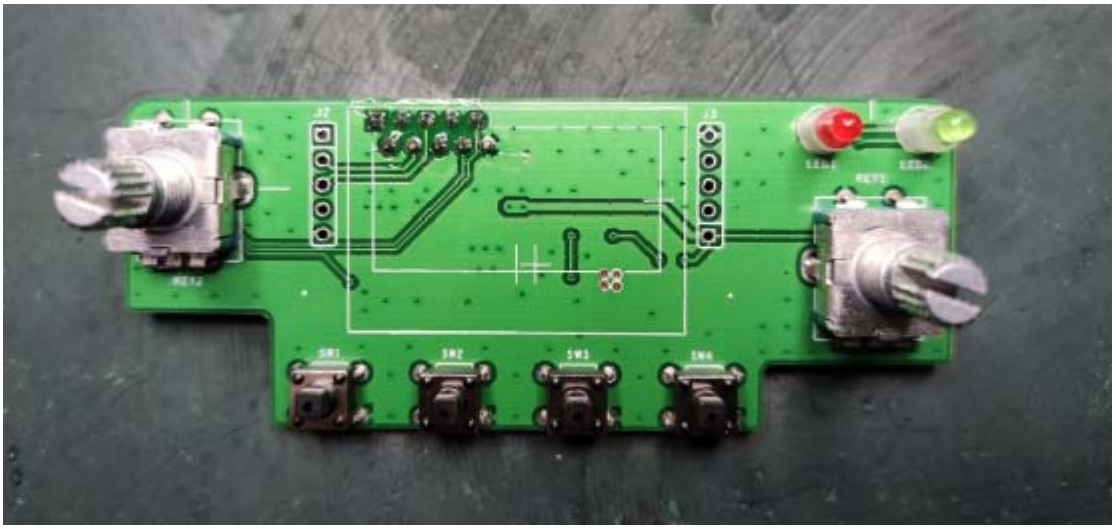

2 Do not weld the OLED display board with the keyboard board! After assembling

everything together, tighten the encoder nuts on both sides.

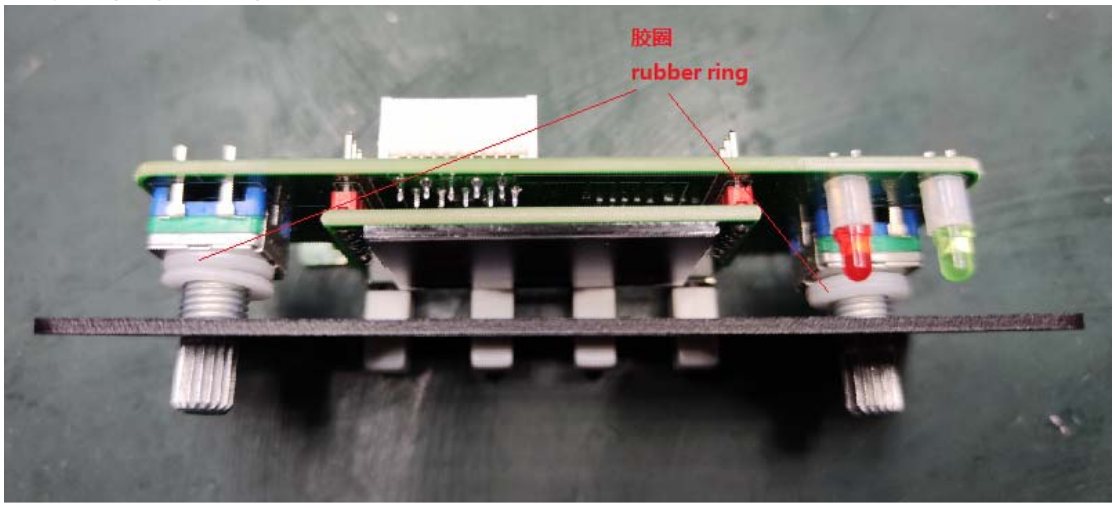

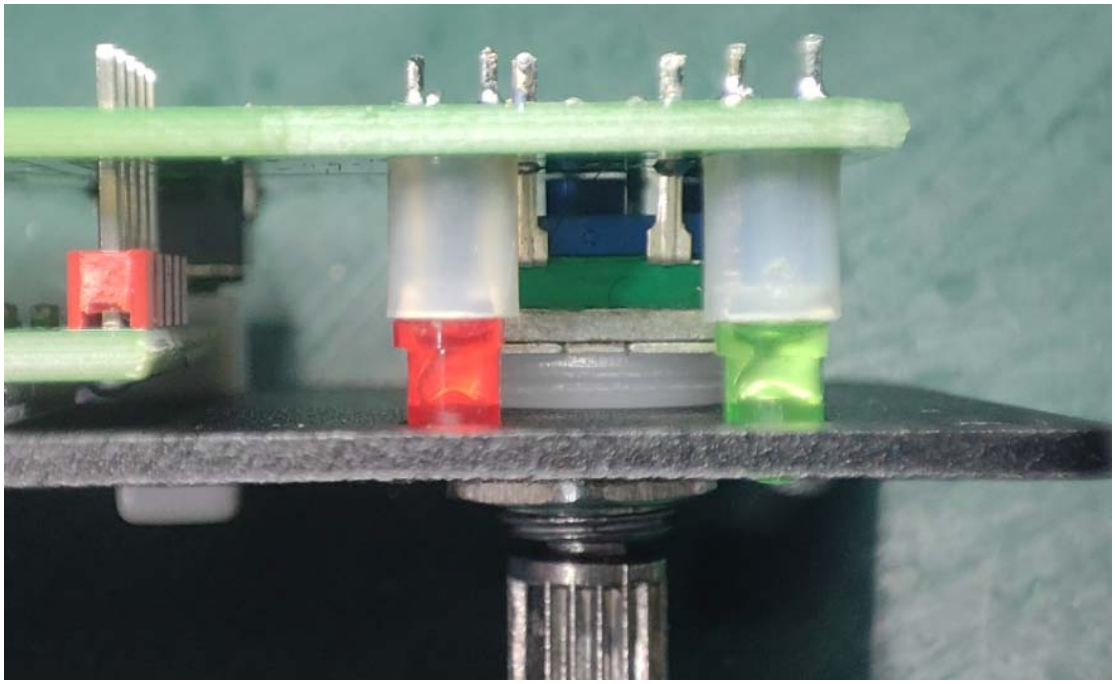

After the OLED backp board is closely fitted to the front panel, solder the needles on the OLED display board

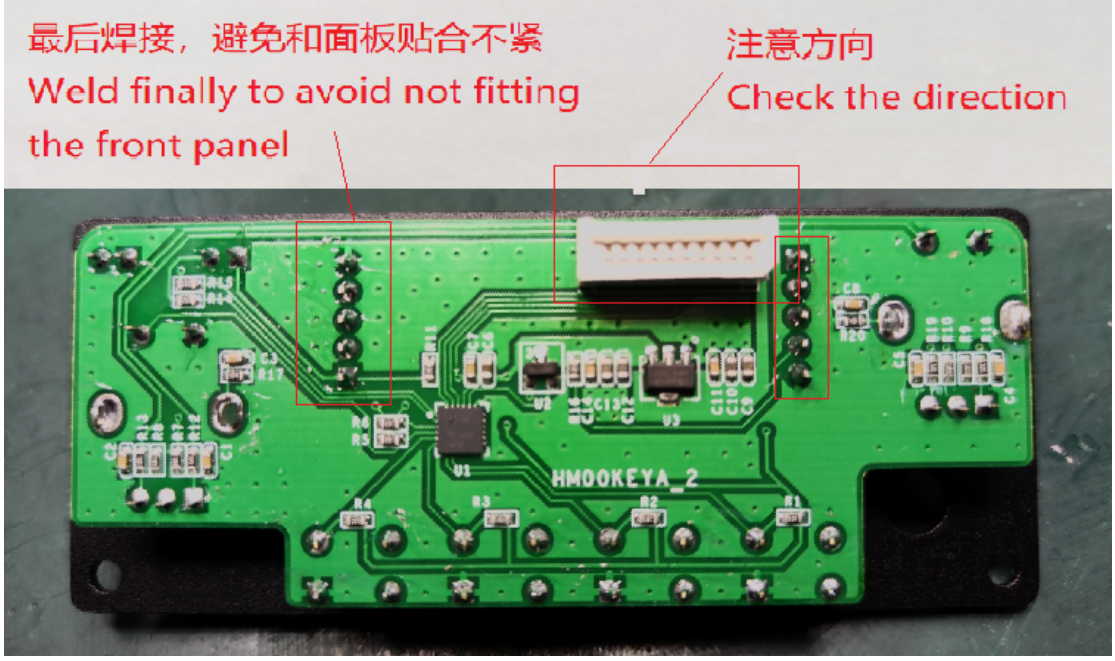

Rear panel assembly

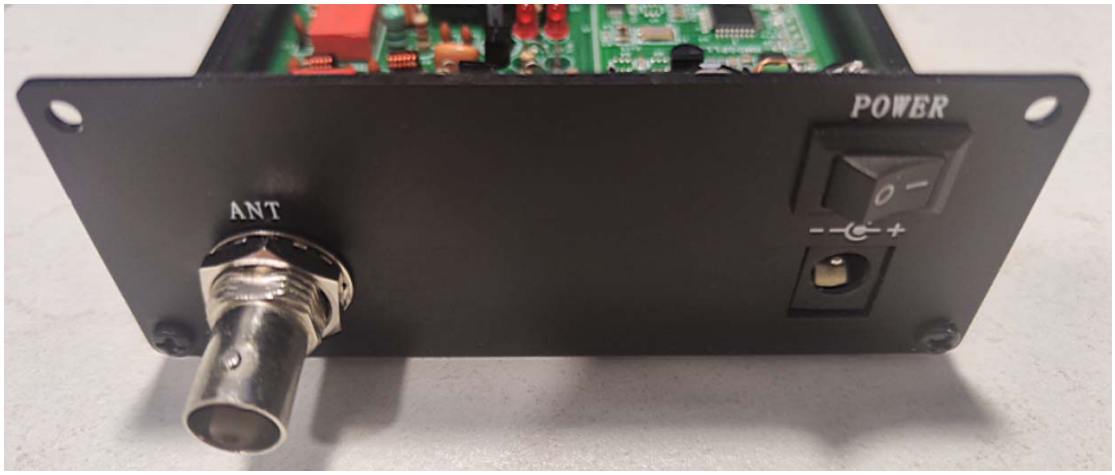

Speaker assembly

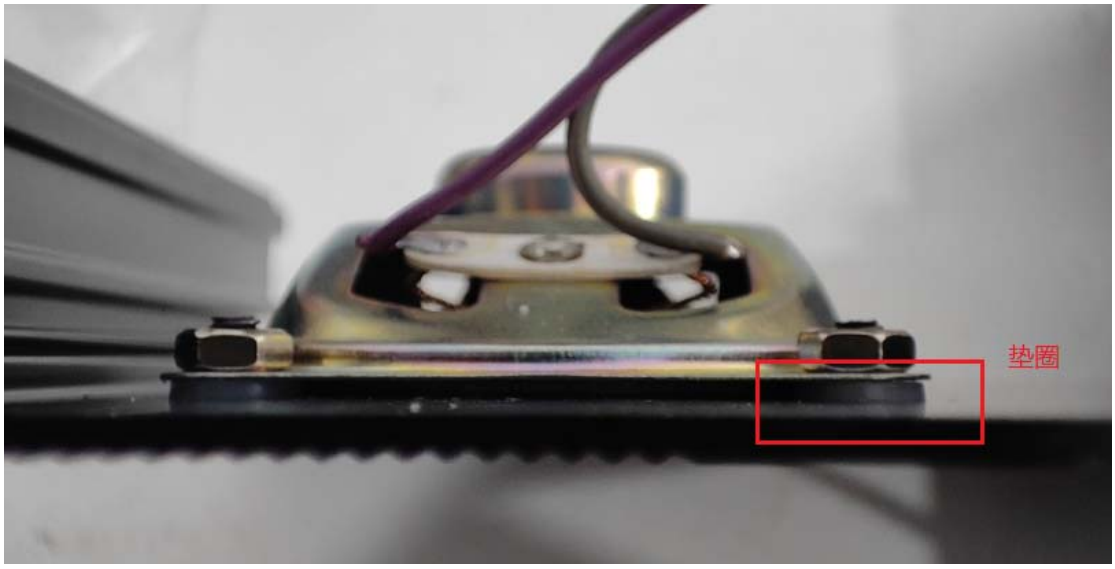

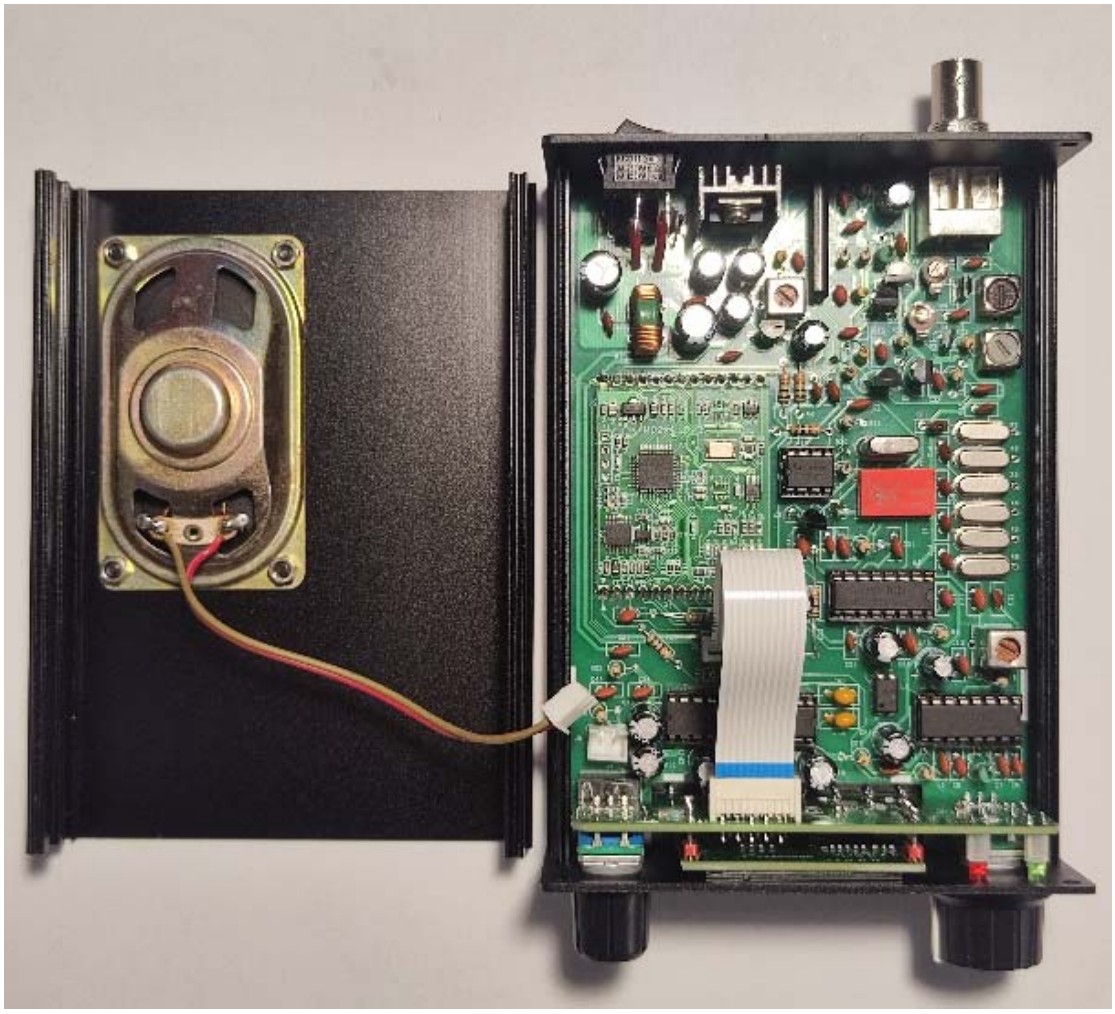

The connection between the front panel and the mother board, pay attention to the direction of the FPC connector, do not install the reverse!

Assembly and Adjustment

Test all transistors, resistors, and capacitors with a multimeter before installing all components, then install all components according to the circuit diagram and the markings on the PCB.

Generally, fit the components in the order of lowest to highest height above the PCB. At the same time, install sockets for the integrated circuits. This avoids the need to solder the main integrated circuits.

Check your work carefully. If your assembly is correct, connect the power supply. IMPORTANT: Make sure the positive and negative polarity of the power supply is correct.

Plug a pair of Walkman-type earphones into the earphone socket. You should hear white noise.

Now, connect a piece of insulated stranded copper wire about 60 cm long to the antenna socket. You should hear the noise increase significantly. This means that the receiver is basically operating correctly.

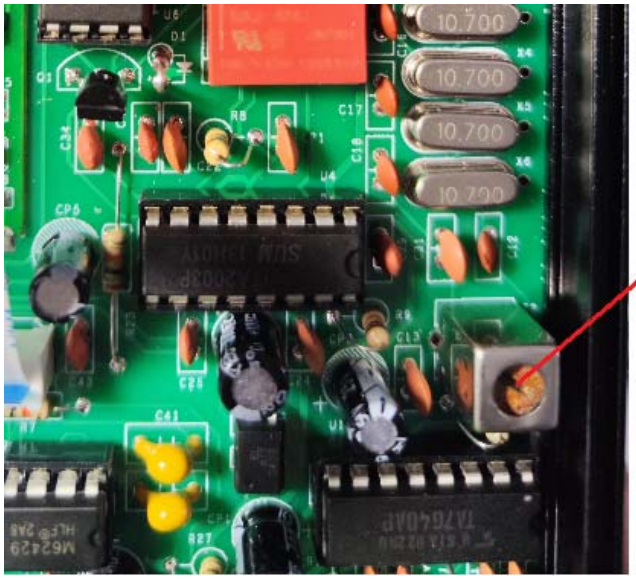

没有仪表时，反复调整，调节到底噪和正常声音的平衡点

When there is no meter, it is adjusted repeatedly to balance the noise and normal sound。

Panel functions are below。

The power plug and connection details for this receiver are as follows:

电源插头：内正外负

Instructions for use

After normal power-on, the OLED screen displays normally, and the encoder is in frequency adjustment mode by default. At this time, press the STEP key, and you can see that the triangle below the number will keep moving, representing that the step is constantly changing.

By default, the volume adjustment mode is used during power-on. Press the VOL/SQL button to switch VOL setting mode or SQL setting mode. In the VOL setting, the speaker symbol is shown in the following figure. In the SQL setting, the speaker letter is shown in the following figure. Respectively represent the current encoder knob mode.

VOL setting mode

SQL setup mode

Press the MENU key and the display will switch to the CH menu, > representing the currently selected item,adjusting the encoder will change the selection.

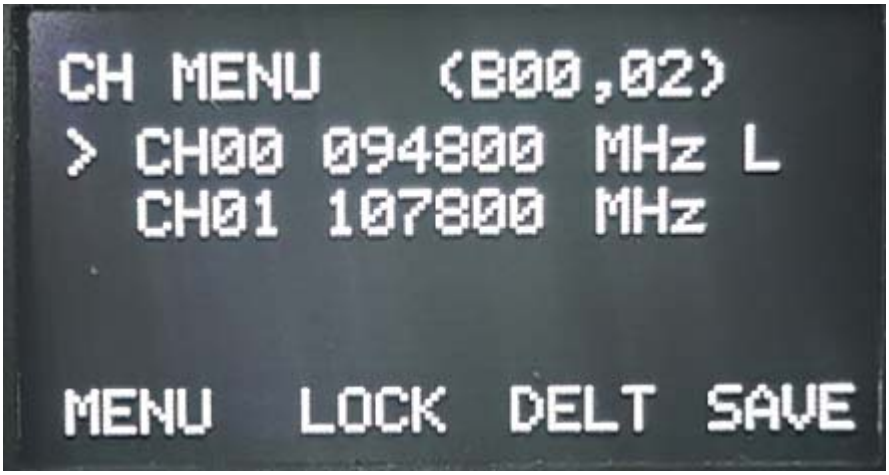

Under the CH menu, there are two CH items by default, and the four keys are:

MENU press once to switch to the next menu

LOCK Lock key, press this key, the currently selected CH entry will be locked, will not be deleted. Pressing it again will cancel the lock.

DELT Delete key. If the selected entry is not locked, press this key to delete the current CH entry. The CH table has at least one entry and cannot be completely empty.

SAVE saves the current CH table and still exists after power failure.

Under this menu, press the encoder button, all unlocked CH entries will be deleted, and the automatic search function will be activated, and the CH table will be automatically filled after the

search is completed.

Pressing the MENU key will bring you to the Configuration menu, > represents the currently selected item, selecting Encoder will change the selection. Currently there are 0-6 items.

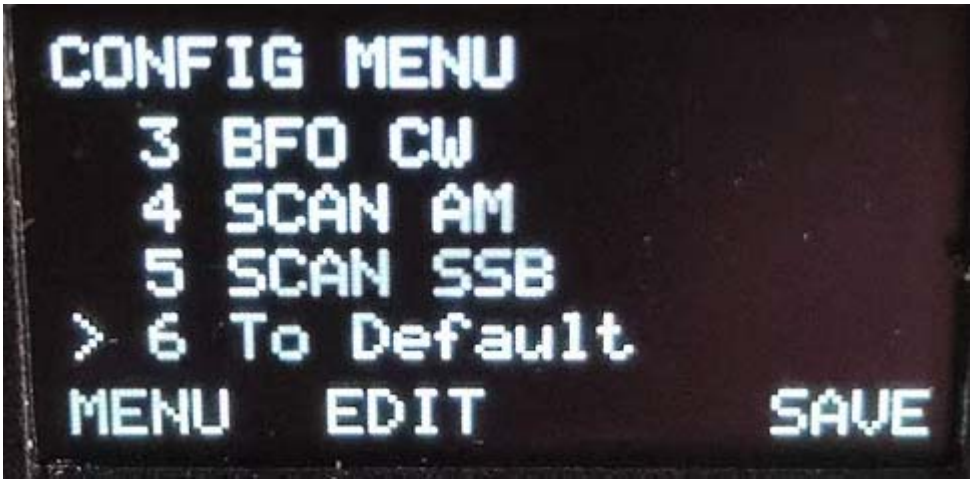

There are 3 buttons under this menu,

MENU press once to switch to the next menu

EDIT press once to edit the selected item (the encoder rotates to modify the operation), and press again to end the editing

SAVE Saves the parameter Settings

This interface is used for experienced personnel with instruments to perform operations.

0 XTAL Frequency. The default frequency is 250068, which indicates 250068 x 100Hz. Can be modified according to the actual measurement.

1 AM mode IF frequency. The default value is 107000, which indicates 107000 x 100Hz.

2 SSB/CW mode IF frequency. The default value is 107000, which indicates 107000 x 100Hz.

3 BFO frequency in CW mode, default is 800, which indicates 800Hz.

4 On AM mode, the signal strength threshold, the default 3000, which means that the automatic search station is valid when the AD sampling exceeds 3000.

5 On SSB/CW mode, the signal strength threshold, the default 3000, which means that the

automatic search station is valid when the AD sampling exceeds 3000.

6 Restore to Factory Settings.

Press the MENU key to enter the information menu.

Press the MENU key again to exit the initial menu.。

Attention:

Under the initial menu, long press the MENU key for more than 3 seconds to switch between VFO mode and MEM mode.

In VFO mode, if you need to save a frequency and hold down the STEP key for more than 3 seconds, the current frequency key is written into the CH table.

Under the initial menu, the machine will automatically write the current set band, mode, frequency, volume, and squelch into the internal EEPROM, which will be used directly when the next power on.

Parts List

Main board

1/4W 5% Resistors		
R1,R3,R8,R27	100	
R2,R4,R5,R9,R12,R19	1K	
R6	47K	
R7,R10,R11,R18,R20,R21, R23,R25	10K	
R13,R14,R15	100K	
R16,R17	470	
R22,R24,R26	10	
Beads, inductors, transformers		
L1	100uH	
L2	10uH	
T1,T2	7X7-10.7MHz-B （RED）	
T3	7X7-LH (Mark: H)	
T4	7X7-LL （Mark: L）	

B1	T120604 Common-mode coil	
Chip capacitance		
C1,C2,C3,C5,C6,C7,C13,C21,C22,C23,C24,C27,C31,C35,C36,C37,C38,C39,C44,C45,C46,C47	0.1uF(104)	
C4,C8,C9,C19,C20,C26,C28,C29,C30,C32,C33,C34,C42,C43	0.01uF(103)	
C10,C25	100pF	
C11,C12,C14,C15,C16,C17,C18	47pF	
Monolithic capacitor		
C40,C41	3.3u /50V	
Electrolytic capacitor		
CP1,CP2,CP4,CP6,CP7,CP11	100uF /25V	
CP3	10uF/25V	
CP5,CP9	47u /25V	
CP8,CP10,CP14,CP15,CP16	220uF /25V	
CP12,CP13	470uF/25V	
Adjustable capacitance		
CX1,CX2	2/7pF	
Transistor		
D1	1N4148	
D2,D3	1SV149	
D4	P6KE16A	

Q1	8050	TO92
Q2,Q4	9015	TO92
Q3,Q5	J310	TO92
IC		
U1	TA7640 （DIP16）	Have IC socket
U2	TA7358	
U3	PC817	
U4	TA2003 （DIP16）	Have IC socket
U5	78L09（TO92）	
U6	LM358 （DIP8）	Have IC socket
U8	FM62429（DIP8）	Have IC socket
U7	TDA7231 （DIP8）	Have IC socket
U9	7805（TO220）	
Crystals and filters		
X7	10M08A	
X1,X2,X3,X4,X5,X6	10.7MHz	
Other components		
J1	BNC（Q9）	

J5	Speaker socket	SPK
J4	3.5mm stereo socket	PHN
J3	FPC socket	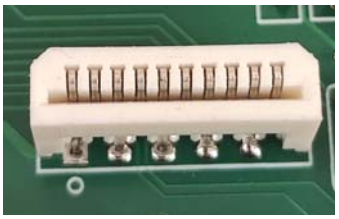
J6	Power socket	5.5/2.1
PS1	Power wiring	
Blank PCB board×1pcs		
Heat sink ×1、M3 screw ×1		

PCB Assembly Drawing

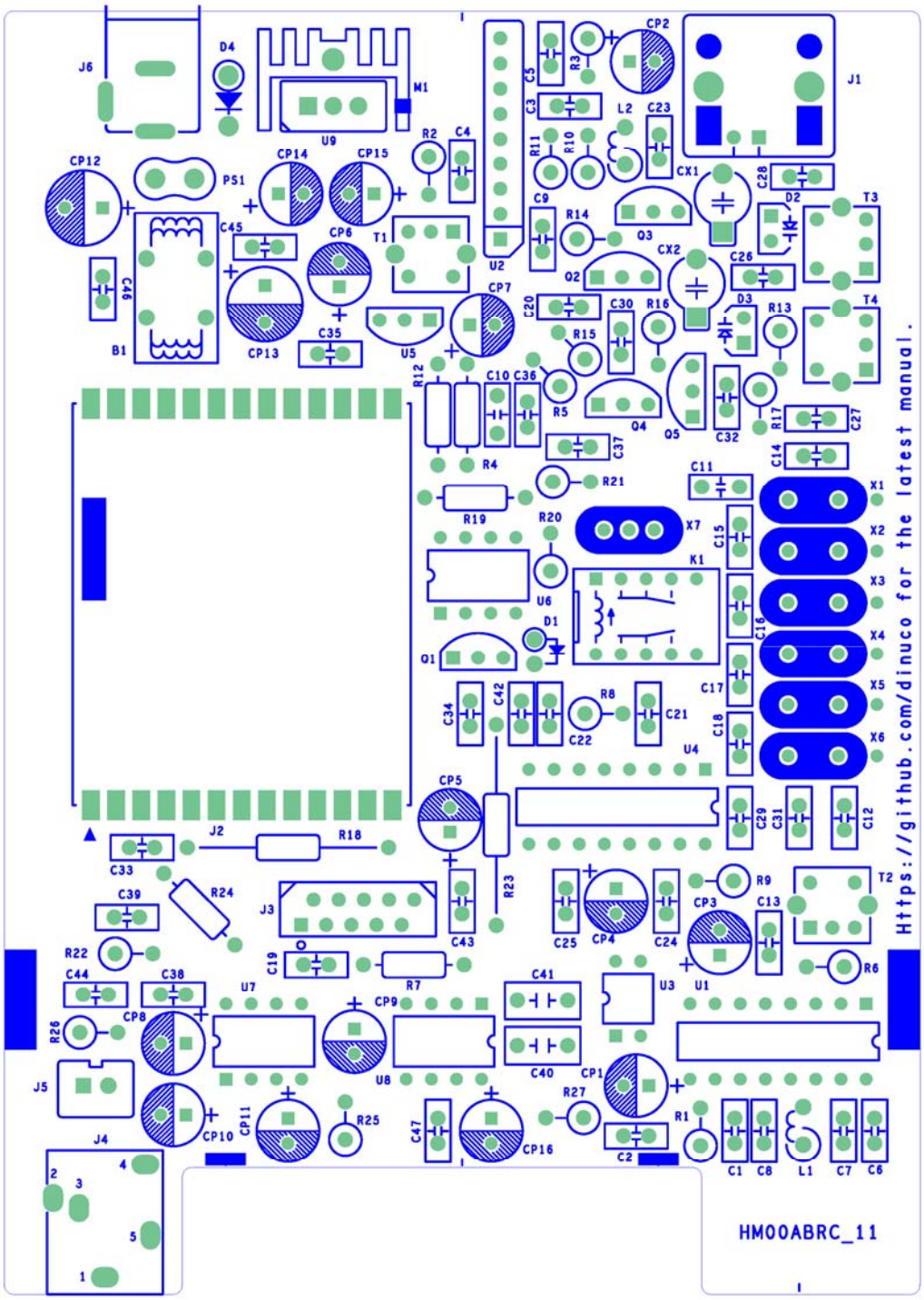

Resistor Color Codes and Ceramic Capacitor Identification

Resistors are marked using colored bands. Most resistors are 5% accuracy parts and marked with four bands. Less common 1% accuracy resistors are marked with 5 color rings. The following table can be used to read the value of these resistors:

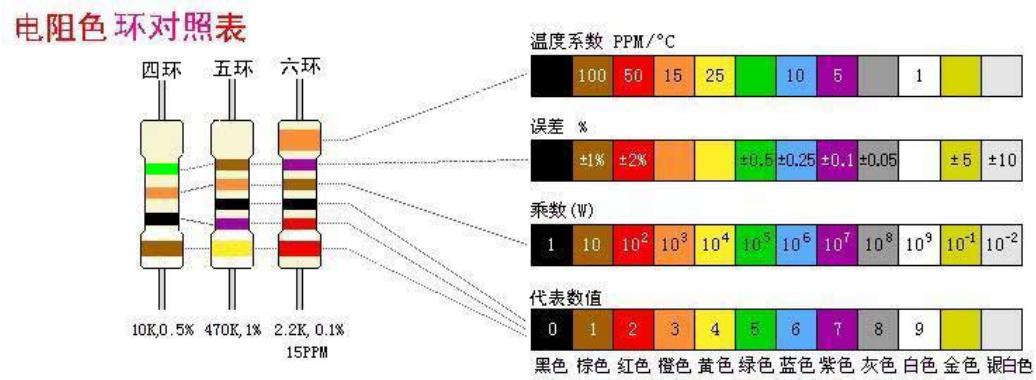

The capacitance of ceramic capacitors is generally denoted in units of pF (p meaning pico or 10^-12). However, some parts are directly labeled, such as 1000p, 220p, etc.

Most are labelled in exponential terms, such as 102,221. The first two digits are two most significant digits of the capacitor's value, the last digit being the number of zeros added after these digits. For example, "102" means that the leading digits are 10, while 2 means that 2 more zeros are added, i.e. 1000pF. Similarly, "221" means that the leading digits are 22, and 1 means that one further zero is added, i.e. 220pF.

62 here means 62pF

102 here means 1000pF

Polarity of Electrolytic Capacitors

Electrolytic capacitors are polarised. Please make sure that the positive and negative pins of these capacitors correspond correctly to the PCB markings when inserting these parts.

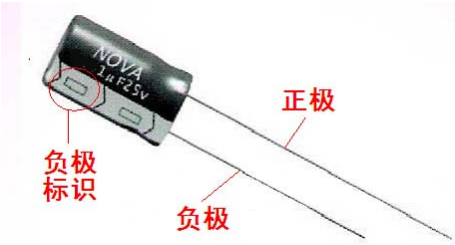

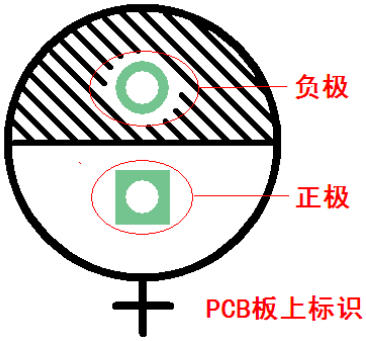

IC Identification

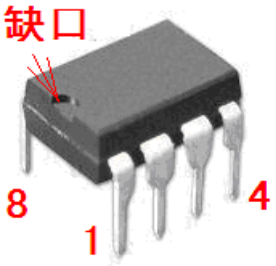

8 脚直插管脚排列

Identification of Transistors and Diodes

TO-92 package pin arrangement 1N4148 diode polarity 1N4001 diode polarity

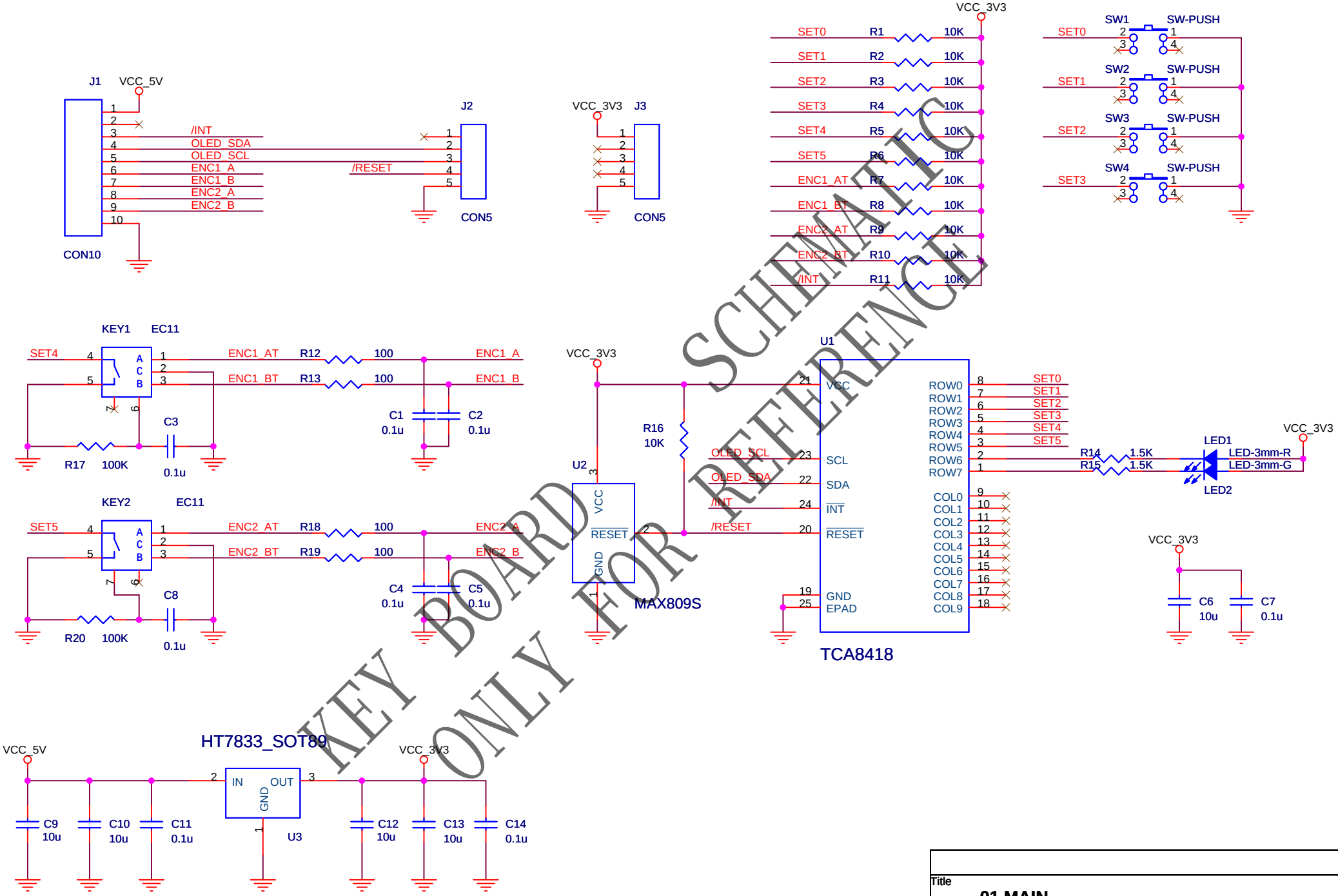

KEY BOARD SCHEMATIC
ONLY FOR REFERENCE

Title	01.MAIN	
Size A4	Document Number HM00KEYA_2	Rev 2.0
Date: Saturday, January 31, 2026	Sheet 1 of 1	

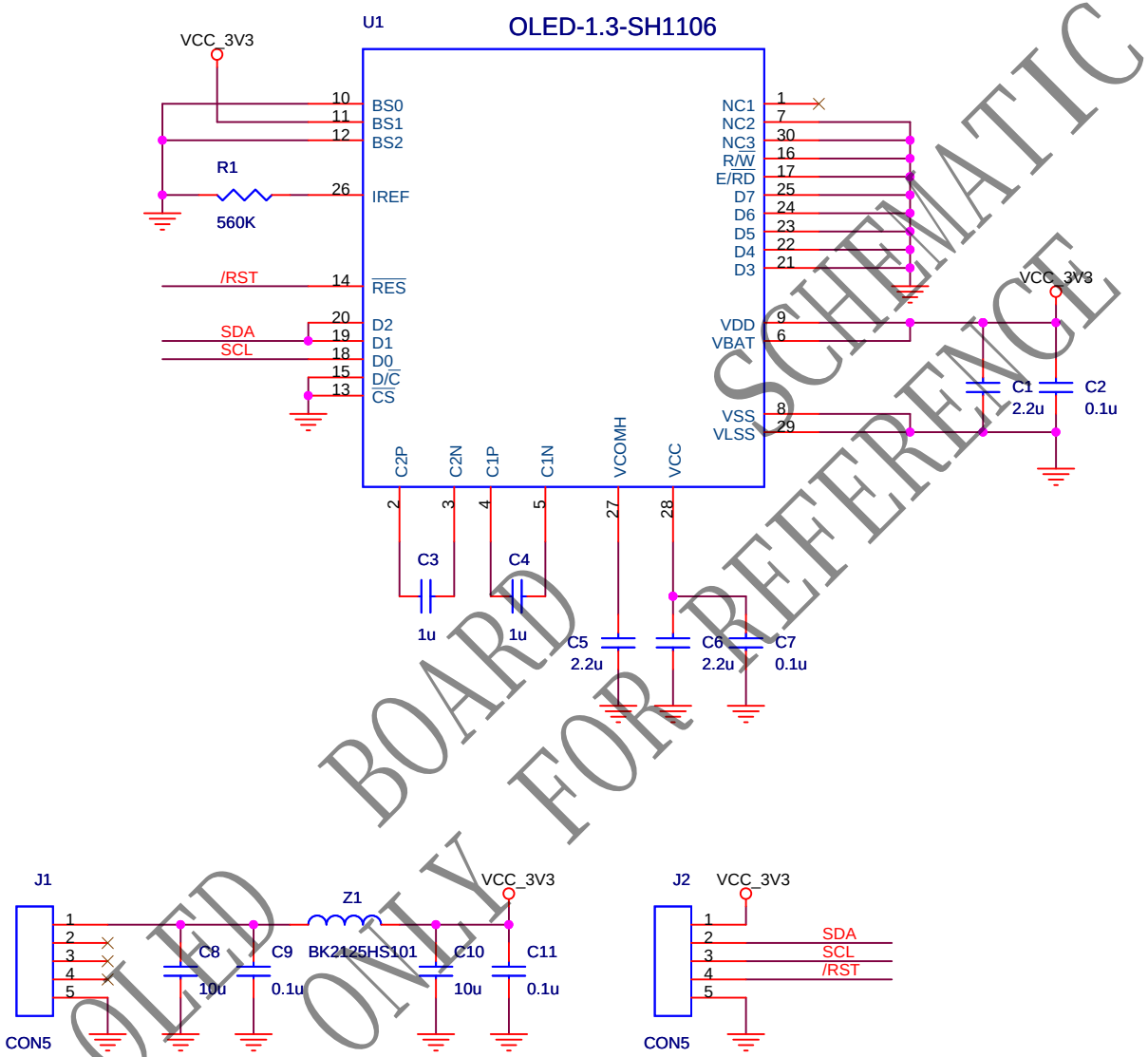

SCHEMATIC
BOARD
OLED
ONLY
FOR REFERENCE

Title	01.MAIN	
Size A4	Document Number HM00OBKA_3	Rev 3.0
Date: Saturday, January 31, 2026	Sheet 1 of 1	

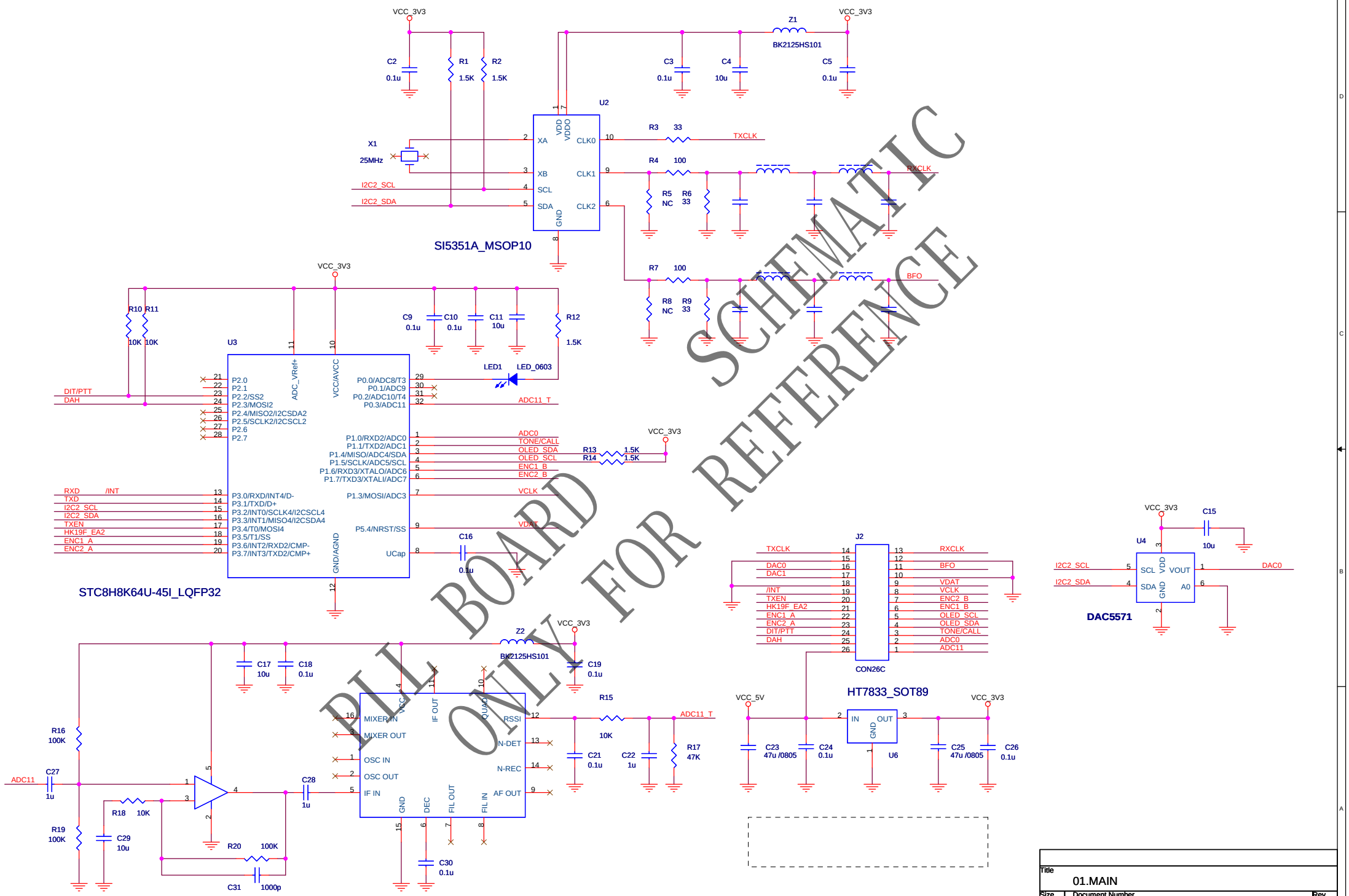

Title	01.MAIN
Size A3	Document Number HM00PLLD_3
Rev	3.0
Date:	Friday, December 05, 2025
Sheet	1 of 1

R50短波AM/SSB/CW接收机电路图（V11.0）
淘宝店：dinuco.taobao.com
邮　箱：dinuco@163.com

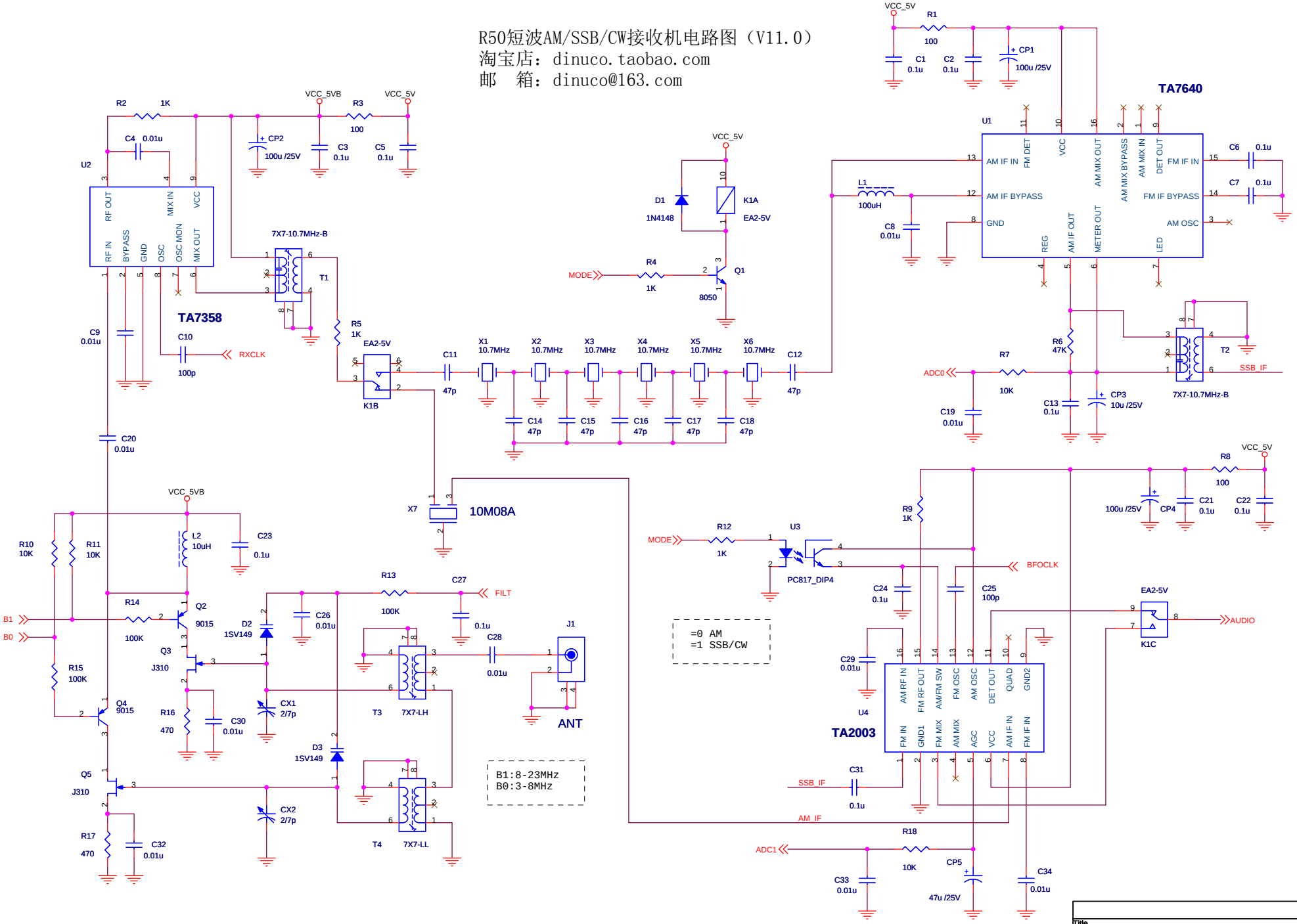

Title	01.MAIN
Size A3	Document Number HM00ABRC_11
Rev	11.0
Date:	Wednesday, March 04, 2026
Sheet	1 of 2

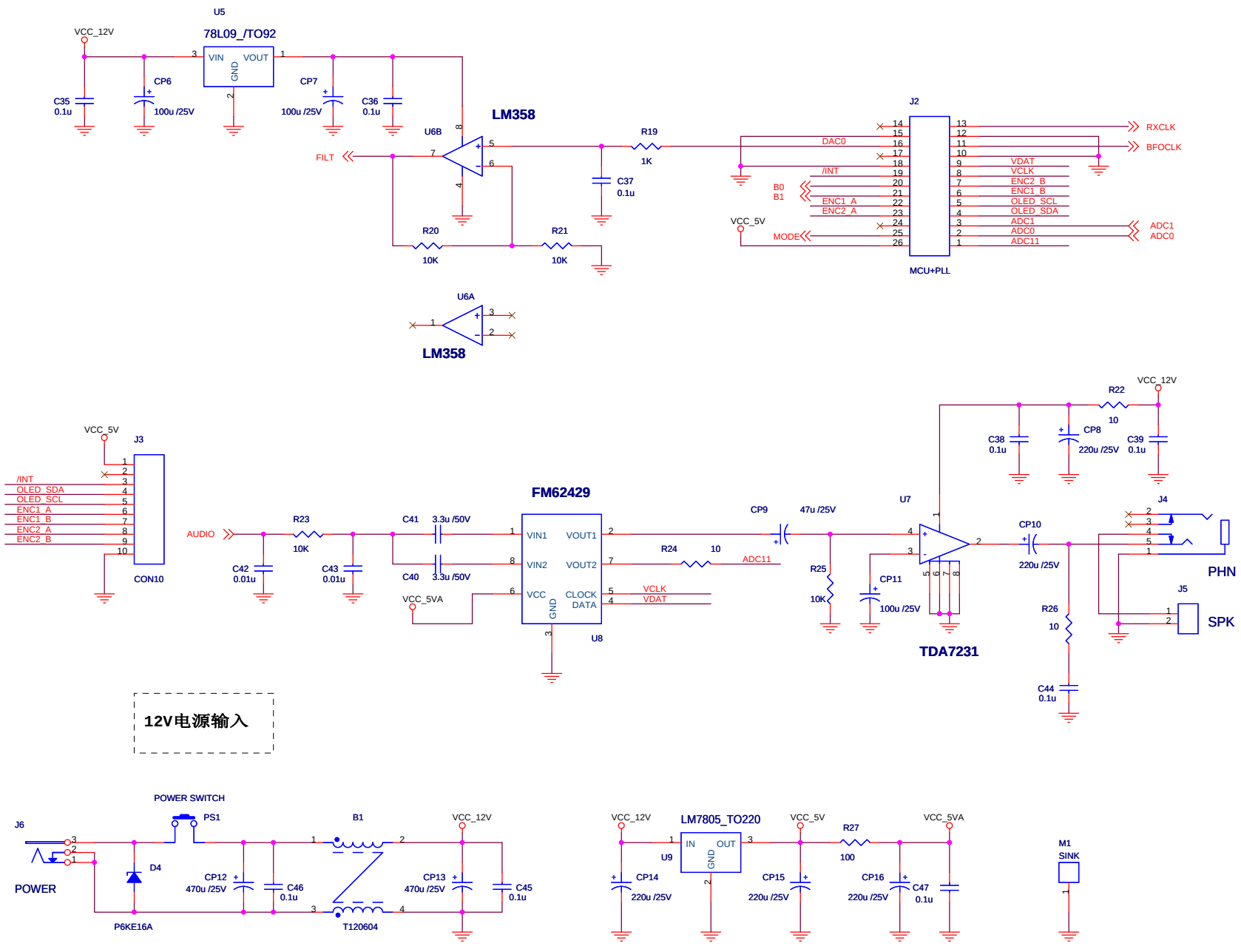

Title	2.OTHER
Size A3	Document Number HM00ABRC_11
Rev	11.0
Date:	Wednesday, March 04, 2026
Sheet	2 of 2